IFC 300 Technical Datasheet

Electromagnetic Flow Converter

- 3 x 100% diagnostics: Process and instrument diagnostics, accuracy check
- One signal converter for all applications
- Exceeds requirements of VDI / VDE 2650 and NAMUR NE 107

HART COMMUNICATION PROTOCOL

KROHNE

The signal converter with the highest performance

The **IFC 300** is the only electromagnetic flow converter with 3 x diagnostics including the complete process and instrument diagnostics right up to the accuracy and linearity check.

The **IFC 300** fits to all sensors. It is the only instrument on the market suitable for all applications.

1. One housing for Ex and non-Ex
2. Large graphic display with intuitive operation
3. Available for AC and DC voltage operation

1. Same hardware for different housing types
2. Several outputs are available depending on the options chosen

Highlights

- Excellent long-term stability
- Optimal zero point stability independent from product properties
- One converter for all applications, and thus advantages with regard to procurement, engineering and stock-keeping
- Integrated temperature and conductivity measurement
- Approval for Custody Transfer
- Maximum process safety

Industries

- Chemical
- Food & beverages
- Minerals & mining
- Oil & gas
- Pharmaceutical
- Power plants
- Pulp & paper
- Water & wastewater

Applications

- Products with low conductivity, high solid content or entrained air
- Inhomogeneous, abrasive and corrosive products
- Rapid product change
- Sudden change in pH value
- Pulsating or turbulent flows

Options and variants

Modular converter concept

The electromagnetic signal converter **IFC 300** comes in different variants, but has a viable performance for as many applications as you can think of. From networking in the water & wastewater industry to blending in the chemical industry, from batching in the food & beverage industry to transport in the paper & pulp industry. And not to forget all those other applications where electrically conductive fluids flow through pipelines all over the world. The signal converter concept allows you to select the right solution for your particular application.

Separate design in various versions

Depending on your application, you might want to have the signal converter in a specific design or with a specific functionality. Besides the compact design – where the signal converter is connected to the flow sensor – you can have a separate design, where the flow sensor is in the pipeline and the signal converter is hanging on the wall, on a pipe or in a panel. Regardless of the signal converter's design, the functionality is always the same.

Signal converter for any application

The basic electronics cover more than 90% of all applications, featuring a current output with HART, pulse/frequency output, status output and control input. Optionally, you can exchange one or more outputs for expanded functionality, e.g. two current outputs and two pulse outputs. Any combination within up to four inputs and outputs is possible. In addition, the electronics can be equipped with fieldbus functionality (i.e. Foundation Fieldbus, Profibus PA/DP, Modbus, etc.) enabling connection to any third party system.

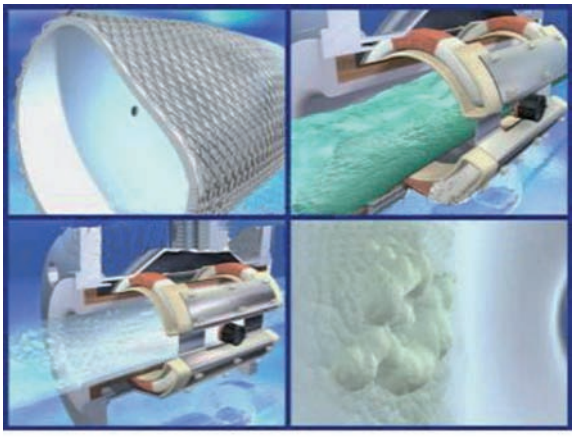

Diagnostics

The default functionality includes extensive diagnostics, continuous and real time verification of the instrument's core measurement, its installation and its application. This is done without any additional sensors, providing you with valuable information about the current status of the instrument, its measurement and its application. As a result, we offer you piece of mind and reduction of operational and maintenance costs.

Technical data

Measuring system

Measurement principle	Faraday's law of induction
Scope of use	Continuous measurement of current volume flow, flow speed, conductivity, mass flow (at constant density), coil temperature of the measuring sensor
Modular construction	The measurement system consists of a measurement sensor and a signal converter
Signal converter	
Compact version (C)	IFC 300 C (Option: Ex version)
Field housing (F) - remote version	IFC 300 F (Option: Ex version)
Wall-mounted housing (W) - remote version	IFC 300 W
19" rack (R) - remote version	IFC 300 R
Measuring sensor	
OPTIFLUX 1000	DN10...150 / 3/8"...6"
OPTIFLUX 2000	DN25...3000 / 1"...120" (Option: Ex version)
OPTIFLUX 4000	DN2.5...3000 / 1/10"...120" (Option: Ex version)
OPTIFLUX 5000	DN2.5...250 / 1/10"...12" (Option: Ex version)
OPTIFLUX 6000	DN2.5...150 / 1/10"...6" (Option: Ex version)
Communication	
Inputs / outputs	Current (incl. HART®), pulse, frequency and/or status output, limit switch and/or control input (depending on the I/O version)
Counters	2 or 3 internal counters with a max. of 8 counter places (e.g. for counting volume and/or mass units)
Verification	Integrated verification, diagnosis functions: flowmeter, process, measured value, empty pipe detection, stabilization
Options	Ex-i, Foundation Fieldbus, Profibus PA and DP, Modbus
Display and user interface	
Graphic display	LC display, backlit white; size: 128x64 pixels, corresponds to 59x31 mm = 2.32"x1.22"
Display functions	2 measured value pages, 1 status page, 1 graphic page (measured values and depictions adjustable as required)
Units	Metric, British and US units selectable as required from lists for volume / mass flow and counting, flow speed, electrical conductivity, temperature
Language of display texts	English, French, German, Dutch, Polish, Portuguese, Danish, Spanish, Swedish, Slovenian, Italian (others on request)
Operator input elements	4 optical keys for operator control of the signal converter without opening the housing
	Infrared interface for reading and writing all parameters with IR interface (option) without opening the housing

Measuring accuracy

Maximum measuring error	±0.15% of the measured value ±1 mm/s, depending on the measuring sensor (see accuracy curves)
Repeatability	±0.06% to OIML R117

Operating conditions

Temperature	
Process temperature	See also data sheet for the measuring sensor
Ambient temperature	-40…+65°C / -40…+149°F (ambient temperature 55°C / 131°F and higher: protect electronics against self-heating, because an increase in the electronics temperature in 10°C / 50°F steps leads to a corresponding reduction of the electronics' service life by a factor of two.)
Storage temperature	-50…+70°C / -58…+158°F
Electrical conductivity	
All media except for water	Min. 1 µS/cm (see also data sheet for the measuring transformer)
Water	Min. 20 µS/cm
Solids content (volume)	Max. 30%

Materials

Die-cast aluminium (polyurethane-coated)	Standard (only versions C and F)
Polyamide - polycarbonate	Standard (only version W)
Stainless steel 316 L (1.4404)	Option (only versions C and F)

Electrical connection

Voltage	Standard: 100…230 VAC (-15% / +10%), 50/60 Hz
	Option 1: 24 VDC (-55% / +30%)
	Option 2: 24 VAC/DC (AC: -15% / +10%; DC: -25% / +30%)
Power consumption	Standard: 22 VA
	Option 1: 12 W
	Option 2: AC 22 VA; DC: 12 W
Signal cable	Only for remote versions
A: type DS 300	Max. length: 600 m / 1950 ft (depending on electrical conductivity and measuring sensor version)
B: type BTS 300	Max. length: 600 m / 1950 ft (depending on electrical conductivity and measuring sensor version)
Type LIYCY (only FM, Class 1 Div. 2)	Max. length: 100 m / 330 ft (depending on electrical conductivity and measuring sensor version)
Cable entries	Standard: M20 x 1.5
	Option: ½" NPT, PF ½

Inputs and outputs

Current output			
Function	Measurement of volume and mass (at constant density), HART® communication		
Settings	**Without HART®**		**With HART®**
	Q = 0%: 0…15 mA		Q = 0%: 4…15 mA
	Q = 100%: 10…21.5 mA		Q = 100%: 10…21.5 mA
	Error identification: 0…22 mA		Error identification: 3.5…22 mA
Operating data	**Basic I/Os**	**Modular I/Os**	**EEx-i**
Active	$U_{int,nom}$ = 24 VDC I ≤ 22 mA R_L ≤ 1 kΩ		$U_{int,nom}$ = 20 VDC I ≤ 22 mA R_L ≤ 450 Ω
			U_0 = 21 V I_0 = 90 mA P_0 = 0.5W C_0 = 90 nF / L_0 = 2 mH C_0 = 110 nF / L_0 = 0.5 mH
Passive	U_{ext} ≤ 32 VDC I ≤ 22 mA U_0 ≤ 1.8 V at I = 22 mA		U_{ext} = 32 VDC I ≤ 22 mA U_0 ≤ 4 V at I = 22 mA
			U_i = 30 V I_i = 100 mA P_i = 1 W C_i = 10 nF L_i ~ 0 mH

Pulse or frequency output			
Function	Can be set as a pulse output (e.g.- for volume or mass counting) or frequency output		
Settings	For Q = 100%: 0.01...10000 pulses per second or pulses per unit volume		
	Pulse width: setting automatic, symmetric or fixed (0.05...2000 ms)		
Operating data	**Basic I/Os**	**Modular I/Os**	**EEx-i**
Active	-	U_{nom} = 24 VDC	-
		f_{max} ≤ 100 Hz: I ≤ 20 mA open: I ≤ 0.05 mA closed: $U_{0,nom}$ = 24 V at I = 20 mA	
		100 Hz < f_{max} ≤ 10 kHz: I ≤ 20 mA open: I ≤ 0.05 mA closed: $U_{0,nom}$ = 22.5 V at I = 1 mA $U_{0,nom}$ = 21.5 V at I = 10 mA $U_{0,nom}$ = 19 V at I = 20 mA	
Passive	U_{ext} ≤ 32 VDC		-
	f_{max} ≤ 100 Hz: I ≤ 100 mA open: I ≤ 0.05 mA at U_{ext} = 32 VDC closed: U_0 ≤ 0.2 V at I = 10 mA U_0 ≤ 2 V at I = 100 mA		
	100 Hz < f_{max} ≤ 10 kHz: I ≤ 20 mA open: I ≤ 0.05 mA at U_{ext} = 32 VDC closed: U_0 ≤ 1.5 V at I = 1 mA U_0 ≤ 2.5 V at I = 10 mA U_0 ≤ 5.0 V at I = 20 mA		
NAMUR	-	Passive to EN 60947-5-6 open: I_{nom} = 0.6 mA closed: I_{nom} = 3.8 mA	Passive to EN 60947-5-6 open: I_{nom} = 0.43 mA closed: I_{nom} = 4.5 mA
			U_i = 30 V I_i = 100 mA P_i = 1 W C_i =10 nF L_i ~ 0 mH

Status output / limit switch			
Function and settings	Settable as automatic measuring range change, indicator for direction of flow, overflow, error, operating point or empty pipe detection		
	Valve control with activated dosing function		
	Status and/or control: ON or OFF		
Operating data	**Basic I/Os**	**Modular I/Os**	**EEx-i**
Active	-	U_{int} = 24 VDC I ≤ 20 mA open: I ≤ 0.05 mA closed: $U_{0,nom}$ = 24 V at I = 20 mA	-
Passive	U_{ext} ≤ 32 VDC I ≤ 100 mA open: I ≤ 0.05 mA at U_{ext} = 32 VDC closed: U_0 ≤ 0.2 V at I = 10 mA U_0 ≤ 2 V at I = 100 mA	U_{ext} = 32 VDC I ≤ 100 mA R_L ≤ 47 kΩ open: I ≤ 0.05 mA at U_{ext} = 32 VDC closed: U_0 ≤ 0.2 V at I = 10 mA U_0 ≤ 2 V at I = 100 mA	-
NAMUR	-	Passive to EN 60947-5-6 open: I_{nom} = 0.6 mA closed: I_{nom} = 3.8 mA	Passive to EN 60947-5-6 open: I_{nom} = 0.43 mA closed: I_{nom} = 4.5 mA
			U_i = 30 V I_i = 100 mA P_i = 1 W C_i =10 nF L_i = 0 mH

Control input			
Function	Hold value of the outputs (e.g. for cleaning work), set value of the outputs to "zero", counter and error reset, range change.		
	Start of dosing when dosing function is activated.		
Operating data	**Basic I/Os**	**Modular I/Os**	**EEx-i**
Active	-	U_{int} = 24 VDC Terminals open: $U_{0,nom}$ = 22 V Terminals bridged: I_{nom} = 4 mA On: $U_0 \geq 12$ V with I_{nom} = 1.9 mA Off: $U_0 \leq 10$ V with I_{nom} = 1.9 mA	-
Passive	$U_{ext} \leq 32$ VDC I_{nom} = 6.5 mA at U_{ext} = 24 VDC I_{nom} = 8.2 mA at U_{ext} = 32 VDC On: $U_0 \geq 8$ V with I_{nom} = 2.8 mA Off: $U_0 \leq 2.5$ V with I_{nom} = 0.4 mA	$U_{ext} \leq 32$ VDC $I \leq 9.5$ mA at U_{ext} = 24 V $I \leq 9.5$ mA at U_{ext} = 32 V On: $U_0 \geq 3$ V with I_{nom} = 1.9 mA Off: $U_0 \leq 2.5$ V with I_{nom} = 1.9 mA	$U_{ext} \leq 32$ VDC $I \leq 6$ mA at U_{ext} = 24 V $I \leq 6.6$ mA at U_{ext} = 32 V On: $U_0 \geq 5.5$ V or $I \geq 4$ mA Off: $U_0 \leq 3.5$ V or $I \leq 0.5$ mA U_i = 30 V I_i = 100 mA P_i = 1 W C_i = 10 nF L_i = 0 mH
NAMUR	-	Active to EN 60947-5-6 Terminals open: $U_{0,nom}$ = 8.7 V Terminals bridged: I_{nom} = 7.8 mA On/off: $U_{0,\ nom}$ = 6.3 V with I_{nom} = 1.9 mA Identification for open terminals: $U_0 \geq 8.1$ V with $I \leq 0.1$ mA Identification for bridged terminals: $U_0 \leq 1.2$ V with $I \geq 6.7$ mA	-
Low-flow cutoff			
On	0...±9.999 m/s; 0...20.0%, settable in 0.1% steps, separately for each current and pulse output		
Off	0...±9.999 m/s; 0...19.0%, settable in 0.1% steps, separately for each current and pulse output		
Time constant			
Function	Can be set together for all flow indicators and outputs, or separately for: current, pulse and frequency output, and for limit switches and the 3 internal counters		
Time setting	0...100 seconds, settable in 0.1 second steps		

Approvals

Hazardous areas	
Non-Ex	Standard
EEx - Zone 1/2	Option (only versions C and F)
FM - Class I, DIV 1/2	Option (only versions C and F)
CSA - GP / Class I, DIV 1/2	Option (only versions C and F)
SAA version Ex Zone 1/2 (in preparation)	Option (only versions C and F)
TIIS - Zone 1/2 (in preparation)	Option (only versions C and F)
Custody transfer	
Standard	without
Option	Cold drinking water (OIML R-49, KIWA K618), non-water (OIML R-117)
Protection category to IEC 529 / EN 60529	
C (compact version) & F (field housing)	IP 66 / 67 (corresponds to NEMA 4X/6)
W (wall-mounted housing)	IP 65 (corresponds to NEMA 4/4X)
R (19" rack)	IP 20 (corresponds to NEMA 1)

Dimensions and Weight

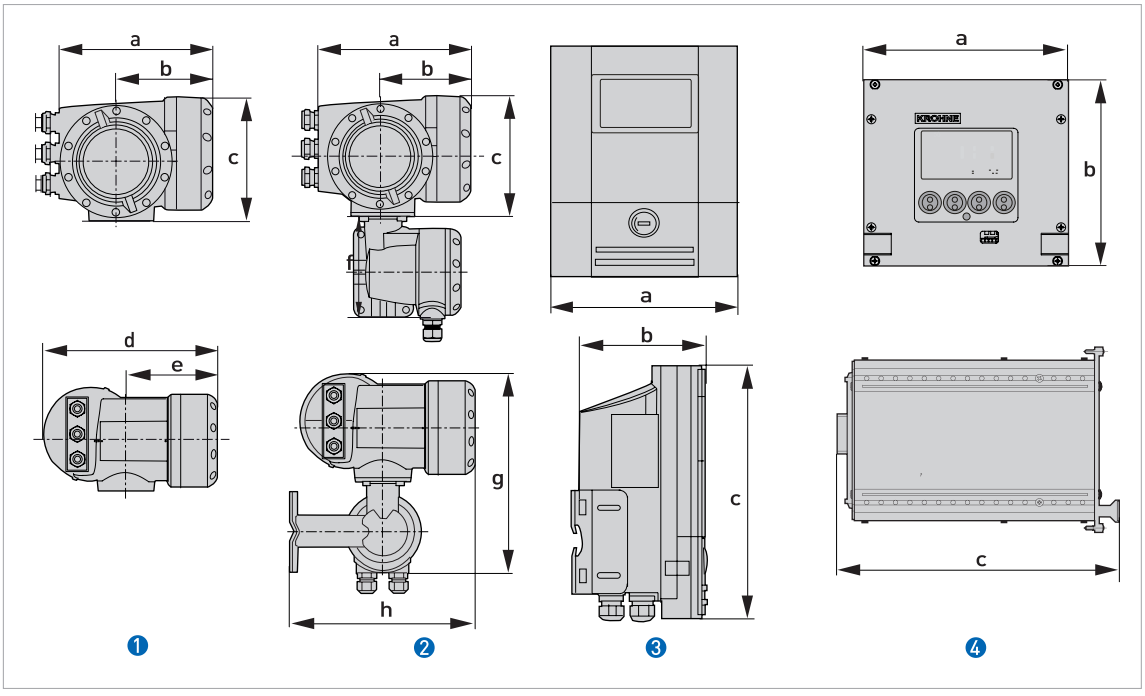

1. Compact version (C)
2. Field housing (F) - remote version
3. Wall-mounted housing (W) - remote version
4. 19" rack (R) - remote version

Dimensions and Weights in mm and kg

Version	Dimensions [mm]								Weights [kg]
	a	b	c	d	e	f	g	h	
C	202	120	155	260	137	-	-	-	4.2
F	202	120	155	-	-	140.5	295.8	277	5.7
W	198	138	299	-	-	-	-	-	2.4
R	142	129	195	-	-	-	-	-	1.2

Dimensions and Weights in inches and lbs

Version	Dimensions [inches]								Weights [lbs]
	a	b	c	d	e	f	g	h	
C	7.75	4.75	6.10	10.20	5.40	-	-	-	9.30
F	7.75	4.75	6.10	-	-	5.50	11.60	10.90	12.60
W	7.80	5.40	11.80	-	-	-	-	-	5.30
R	5.59	5.08	7.68	-	-	-	-	-	2.65

Flow tables

Flow rate in m/s and m^3/h

	$Q_{100\,\%}$ in m^3/h			
m/s	0.3	1	3	12
DN [mm]	Min. flow	Nominal flow		Max. flow
2.5	0.01	0.02	0.05	0.21
4	0.01	0.05	0.14	0.54
6	0.03	0.10	0.31	1.22
10	0.08	0.28	0.85	3.39
15	0.19	0.64	1.91	7.63
20	0.34	1.13	3.39	13.57
25	0.53	1.77	5.30	21.21
32	0.87	2.90	8.69	34.74
40	1.36	4.52	13.57	54.29
50	2.12	7.07	21.21	84.82
65	3.58	11.95	35.84	143.35
80	5.43	18.10	54.29	217.15
100	8.48	28.27	84.82	339.29
125	13.25	44.18	132.54	530.15
150	19.09	63.62	190.85	763.40
200	33.93	113.10	339.30	1357.20
250	53.01	176.71	530.13	2120.52
300	76.34	254.47	763.41	3053.64
350	103.91	346.36	1039.08	4156.32
400	135.72	452.39	1357.17	5428.68
450	171.77	572.51	1717.65	6870.60
500	212.06	706.86	2120.58	8482.32
600	305.37	1017.90	3053.70	12214.80
700	415.62	1385.40	4156.20	16624.80
800	542.88	1809.60	5428.80	21715.20
900	687.06	2290.20	6870.60	27482.40
1000	848.22	2827.40	8482.20	33928.80
1200	1221.45	3421.20	12214.50	48858.00
1400	1433.52	4778.40	14335.20	57340.80
1600	2171.46	7238.20	21714.60	86858.40
1800	2748.27	9160.9	27482.70	109930.80
2000	3393.00	11310.00	33930.00	135720.00
2200	4105.50	13685.00	41055.00	164220.00
2400	4885.80	16286.00	48858.00	195432.00
2600	5733.90	19113.00	57339.00	229356.00
2800	6650.10	22167.00	66501.00	266004.00
3000	7634.10	25447.00	76341.00	305364.00

Flow rate in ft/s and gallons/min

	$Q_{100\ \%}$ in US gallons/min			
v [ft/s]	1	3.3	10	40
DN [inch]	Min. flow	Nominal flow		Max. flow
1/10	0.02	0.09	0.23	0.93
1/8	0.06	0.22	0.60	2.39
1/4	0.13	0.44	1.34	5.38
3/8	0.37	1.23	3.73	14.94
1/2	0.84	2.82	8.40	33.61
3/4	1.49	4.98	14.94	59.76
1	2.33	7.79	23.34	93.36
1.25	3.82	12.77	38.24	152.97
1.5	5.98	19.90	59.75	239.02
2	9.34	31.13	93.37	373.47
2.5	15.78	52.61	159.79	631.16
3	23.90	79.69	239.02	956.09
4	37.35	124.47	373.46	1493.84
5	58.35	194.48	583.24	2334.17
6	84.03	279.97	840.29	3361.17
8	149.39	497.92	1493.29	5975.57
10	233.41	777.96	2334.09	9336.37
12	336.12	1120.29	3361.19	13444.77
14	457.59	1525.15	4574.93	18299.73
16	597.54	1991.60	5975.44	23901.76
18	756.26	2520.61	7562.58	30250.34
20	933.86	3112.56	9336.63	37346.53
24	1344.50	4481.22	13445.04	53780.15
28	1829.92	6099.12	18299.20	73196.79
32	2390.23	7966.64	23902.29	95609.15
36	3025.03	10082.42	30250.34	121001.37
40	3734.50	12447.09	37346.00	149384.01
48	5377.88	17924.47	53778.83	215115.30
56	6311.60	21038.46	63115.99	252463.94
64	9560.65	31868.51	95606.51	382426.03
72	12100.27	40333.83	121002.69	484010.75
80	14938.92	49795.90	149389.29	597557.18
88	18075.97	60252.63	180759.73	723038.90
96	21511.53	71704.38	215115.30	860461.20
104	25245.60	84151.16	252456.02	1009824.08
112	29279.51	97597.39	292795.09	1171180.37
120	33611.93	112038.64	336119.31	1344477.23

Accuracy

Reference conditions

- Medium: water
- Temperature: 20°C / 68°F
- Pressure: 1 bar / 14.5 psi
- Inlet run: ≥ 5 DN

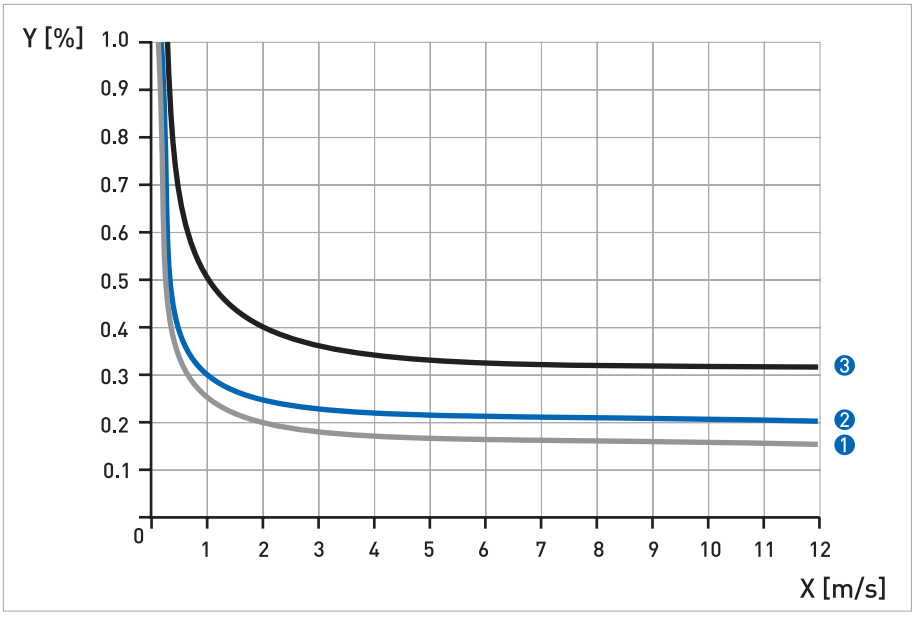

- X [m/s]: flow velocity
- Y [%]: deviation from the actual measured value (mv)

	DN [mm]	DN [inch]	Accuracy	Curve
5300	10….100	3/8…10	0.15% of mv+ 1 mm/s	❶
2300 / 4300 / 6300	10….1600	3/8…80	0.2% of mv + 1 mm/s	❷
1300	10…150	3/8…6	0.3% of mv +2 mm/s	❸
2300 / 4300	>1600	>64	0.3% of mv +2 mm/s	❸
4300 / 5300 / 6300	<10	<3/8	0.3% of mv +2 mm/s	❸

KROHNE measuring technology - Product overview

- Electromagnetic flowmeters
- Variable area flowmeters
- Mass flowmeters
- Ultrasonic flowmeters
- Vortex flowmeters
- Flow controllers
- Level measuring instruments
- Temperature measuring instruments
- Pressure measuring instruments
- Analysis
- Oil and gas industry

Addresses:

Germany

Northern sales office

KROHNE Messtechnik GmbH & Co. KG
Bremer Str. 133
D-21073 Hamburg
Phone:+49 (0)40 767 3340
Fax:+49 (0)40 767 33412
nord@krohne.com
ZIP code: 10000 - 29999, 49000 - 49999

Western and middle sales office

KROHNE Messtechnik GmbH & Co. KG
Ludwig-Krohne-Straße
D-47058 Duisburg
Phone:+49 (0)203 301 4416
Fax:+49 (0)203 301 10416
west@krohne.com
ZIP code: 30000 - 34999, 37000 - 48000, 50000 - 53999, 57000 - 59999, 98000 - 99999

Southern sales office

KROHNE Messtechnik GmbH & Co. KG
Landsberger Str. 392
D-81241 Munich
Phone:+49 (0)89 121 5620
Fax:+49 (0)89 129 6190
sued@krohne.com
ZIP code: 0 - 9999, 80000 - 89999, 90000 - 97999

Southwestern sales office

KROHNE Messtechnik GmbH & Co. KG
Rüdesheimer Str. 40
D-65239 Hochheim/Main
Phone: +49(0)6146) 827 30
Fax:+49 (0)6146 827 312
rhein-main@krohne.com
ZIP code: 35000 - 36999, 54000 - 56999, 60000 - 79999

Instrumentation and control equipment catalog

TABLAR Messtechnik GmbH
Ludwig-Krohne-Str. 5
D-47058 Duisburg
Phone:+49 (0)2 03 305 880
Fax:+49 (0)2 03 305 8888
kontakt@tablar.de; www.tablar.de

KROHNE sales companies

International

Australia
KROHNE Australia Pty Ltd
Quantum Business Park 10/287
Victoria Rd Rydalmere NSW 2116
Phone: +61 2 8846 1700
Fax: +61 2 8846 1755
krohne@krohne.com.au

Austria
KROHNE Gesellschaft m.b.H.
Modecenterstraße 14
A-1030 Vienna
Phone:+43 (0)1/203 45 32
Fax:+43 (0)1/203 45 32 99
info@krohne.at

Belgium
KROHNE Belgium N.V.
Brusselstraat 320
B-1702 Groot Bijgaarden
Phone:+32 (0)2 4 66 00 10
Fax:+32 (0)2 4 66 08 00
krohne@krohne.be

Brazil
KROHNE Conaut Controles Automaticos Ltda.
Estrada Das Águas Espraiadas, 230
C.P. 56 06835 - 080 EMBU - SP
Phone:+55 (0)11-4785-2700
Fax:+55 (0)11 4785-2768
conaut@conaut.com.br

China
KROHNE Measurement Instruments (Shanghai) Co. Ltd., (KMIC)
9th Floor, Xujiahui International Building
1033 Zhaojiabang Road
Shanghai 200030
Phone: +86 21 6487 9611
Fax:+86 21 6438 7110
info@krohne-asia.com

Czech Republic
Krohne CZ, spol. s r.o.
Sobìsická 156
63800 Brno
Phone: +420 (0)545.242 627
Fax: +420 (0)545 220 093
brno@krohne.cz

France
KROHNE S.A.S.
Les Ors BP 98
F-26103 ROMANS Cedex
Phone:+33 (0)4 75 05 44 00
Fax:+33 (0)4 75 05 00 48
info@krohne.fr

Great Britain
KROHNE Ltd.
Rutherford Drive
Park Farm Industrial Estate
Wellingborough
Northants NN8 6AE
Phone:+44 (0)19 33 408 500
Fax:+44 (0)19 33 408 501
info@krohne.co.uk

CIS
Kanex KROHNE Engineering AG
Business-Centre Planeta
Office 404 ul.
Marxistskaja 3
109147 Moscow/Russia
Phone:+7 (0)095 911 7165
Fax:+7 (0)095 742 8873
krohne@dol.ru

India
Krohne Marshall Ltd.
A-34/35, M.I.D.C. Industrial Area, H-Block
Pimpri Poona 411018
Phone:+91 (0)202 744 2020
Fax:+91 (0)202 744 2020
pcu@vsnl.net

Iran
KROHNE Liaison Office
North Sohrevardi Ave. 26,
Sarmad St., Apt. #9
Tehran 15539
Phone: +9821 8874 5973
Fax: +9821 8850 1268
krohne@krohneiran.com

Italy
KROHNE Italia Srl.
Via V. Monti 75
I-20145 Milan
Phone:+39 02 4300 661
Fax:+39 02 4300 6666
info@krohne.it

Korea
KROHNE Korea
Room 508 Miwon Bldg 43
Yoido-Dong Youngdeungpo-Ku
Seoul, Korea
Phone: 00-82-2-782-1900
Fax: 00-82-2-780-1749
mail@krohne.co.kr

Netherlands
KROHNE Nederland B.V.
Kerkeplaat 14
NL-3313 LC Dordrecht
Phone:+31 (0)78 630 6200
Fax:+31 (0)78 630 6405
Service Direct: +31 (0)78 630 6222
info@krohne.nl

Norway
KROHNE Norway A.S.
Ekholtveien 114
NO-1521 Moss
Phone:+47 (0)69 264 860
Fax:+47 (0)69 267 333
postmaster@krohne.no

Poland
KROHNE Polska Sp.z.o.o.
ul. Stary Rynek Oliwski 8a
80-324 Gdansk
Phone: +48 (0)58 520 9211
Fax.:+48 (0)58 520 9212
info@krohne.pl

Switzerland
KROHNE AG
Uferstr. 90
CH-4019 Basel
Phone:+41 (0)61 638 30 30
Fax:+41 (0)61 638 30 40
info@krohne.ch

Singapore
Tokyo Keiso - KROHNE (Singapore) Pte. Ltd.
14, International Business Park,
Jurong East
Chiyoda Building, #01-01/02
Singapore 609922
Phone: (65) 6567 4548
Fax : (65) 6567 9874
tks@tokyokeiso-krohne.com.sg

Republic of South Africa
KROHNE Pty. Ltd.
Bushbock Close
Corporate Park South
Midrand, Gauteng
P.O. Box 2069
Midrand, 1685
Tel.: +27 (0)11 314 1391
Fax: +27 (0)11 314 1681
midrand@krohne.co.za

Spain
I.I. KROHNE IBERIA, S.r.l.
Poligono Industrial Nilo
Calle Brasil, nº. 5
28806 Alcalá de Henares Madrid
Phone: +34 (0)91 883 2152
Fax: +34 (0)91 883 4854
krohne@krohne.es

USA
KROHNE, Inc.
7 Dearborn Road
Peabody, MA 01960
Phone: +1 (800) FLOWING
Phone: +1 (978) 535 6060 (in MA)
info@krohne.com

Representatives

Algeria
Argentina
Cameroon
Canada
Chile
Columbia
Croatia
Denmark
Ecuador
Egypt
Finland
Gabon
Ghana
Greece
Hong Kong
Hungary
Indonesia
Iran
Ireland
Israel
Ivory Coast
Japan
Jordan
Kuwait
Libya
Lithuania
Malaysia
Mauritius
Mexico
Morocco
New Zealand
Peru
Portugal
Romania
Saudi Arabia
Senegal
Slovakia
Slovenia
Sweden
Taiwan
Thailand
Tunisia
Turkey
Venezuela
Yugoslavia

Other countries

KROHNE Messtechnik GmbH & Co. KG
Ludwig-Krohne-Str. 5
D-47058 Duisburg
Phone:+49 (0)203 301 0
Fax:+49 (0)203 301 389
export@krohne.com

4000295601 - TD IFC 300 R04 en

KROHNE